LBNL-62937

ERNEST ORLANDO LAWRENCE
BERKELEY NATIONAL LABORATORY

Microgrids: An Overview of Ongoing Research, Development, and Demonstration Projects

Nikos Hatziargyriou[a], Hiroshi Asano[b], Reza Iravani[c], and Chris Marnay[d]

[a]*Power Division of the School of Electrical and Computer Engineering of National Technical University of Athens, Greece*
[b]*University of Tokyo and Institute of Electric Power Industry in Tokyo, Japan*
[c]*University of Toronto, Canada*
[d]*Environmental Energy Technologies Division, Ernest Orlando Lawrence Berkeley National Laboratory, Berkeley 94720, USA*

Environmental Energy
Technologies Division

July 2007

http://eetd.lbl.gov/EA/EMP/emp-pubs.html

The work described in this report was funded by the Office of Electricity Delivery and Energy Reliability, Distributed Energy Program of the U.S. Department of Energy under Contract No. DE-AC02-05CH11231.

Disclaimer

This document was prepared as an account of work sponsored by the United States Government. While this document is believed to contain correct information, neither the United States Government nor any agency thereof, nor The Regents of the University of California, nor any of their employees, makes any warranty, express or implied, or assumes any legal responsibility for the accuracy, completeness, or usefulness of any information, apparatus, product, or process disclosed, or represents that its use would not infringe privately owned rights. Reference herein to any specific commercial product, process, or service by its trade name, trademark, manufacturer, or otherwise, does not necessarily constitute or imply its endorsement, recommendation, or favoring by the United States Government or any agency thereof, or The Regents of the University of California. The views and opinions of authors expressed herein do not necessarily state or reflect those of the United States Government or any agency thereof, or The Regents of the University of California.

Ernest Orlando Lawrence Berkeley National Laboratory is an equal opportunity employer.

Microgrids

by Nikos Hatziargyriou, Hiroshi Asano, Reza Iravani, and Chris Marnay

An Overview of Ongoing Research, Development, and Demonstration Projects

1540-7977/07/$25.00©2007 IEEE

© EYEWIRE

THE PENETRATION OF DISTRIBUTED GENERATION (DG) at medium and low voltages (MV and LV), both in utility networks and downstream of the meter, is increasing in developed countries worldwide. One key economic potential of DG application at customer premises lies in the opportunity to locally utilize the waste heat from conversion of primary fuel to electricity by reciprocating engine generators (gensets), gas turbines, microturbines (MTs), or fuel cells (FCs) using small-scale combined heat and power (CHP) equipment. Consequently, there has been significant progress toward developing small (kW-scale) CHP applications. These systems, together with solar photovoltaic (PV) modules, small wind turbines (WTs), other small renewables (such as biogas digestors), heat and electricity storage, and controllable loads are expected to play a significant role in future electricity supply. These technologies are herein collectively called distributed energy resources (DERs). They can substantially reduce carbon emissions, thereby contributing to the commitments of most developed countries (or in some cases regional governments, such as California) to meet their greenhouse gas emissions reduction targets (typically based on the Kyoto Protocol), or otherwise substantially reduce their carbon footprints. Also, the presence of generation close to demand can increase the power quality and reliability (PQR) of electricity delivered to sensitive end-uses. Indeed, DERs can be used to actively enhance PQR. In general, these three perceived benefits, increased energy efficiency through CHP, reduced carbon emissions, and improved PQR, are the key drivers for DER deployment, although many other benefits, such as reduced line losses and grid expansion deferral, are also often discussed.

While the application of DERs can potentially reduce the need for traditional system expansion, controlling a potentially huge number of DERs creates a daunting new challenge for operating and controlling the network safely and efficiently. This challenge can be partially addressed by microgrids, which are entities that coordinate DERs in a consistently more decentralized way, thereby reducing the control burden on the grid and permitting them to provide their full benefits. In the context of this article, a microgrid comprises a LV ($\approx\leq$ 1 kV) or MV (usually $\approx$1–69 kV) locally-controlled cluster of DERs that behaves, from the grid's perspective, as a single producer or load both electrically and in energy markets. A microgrid operates safely and efficiently within its local distribution network, but it is also capable of islanding. Microgrid design and operation demand new skills and technology, while distribution systems containing high DER penetration may nonetheless require considerable operational control capabilities. While not strictly compliant with the above definition, small isolated power systems are included here as microgrids. They apply similar technology and provide added insights into how power systems may evolve differently where they are currently rudimentary or nonexistant.

This article outlines the ongoing research, development, and demonstration (RD&D) efforts currently in progress in Europe, the United States, Japan, and Canada as they have been presented in a series of microgrids symposiums started in Berkeley, California, on 17 June 2005, followed by a second near Montréal, Canada, on 23 June 2006, and by a third in Nagoya, Japan, on 6 April 2007. Presentations and other materials from these events are available at http://der.lbl.gov.

RD&D Activities in Europe

In the European Union (EU), the promotion and deployment of DERs are expected to benefit energy consumers, the European energy system, and the environment through optimization of the value chain from energy suppliers to end users. Microgrids are considered a basic feature of future active distribution networks, able to take full advantage of DERs, if coordinated and operated efficiently. They have been studied in a number of RD&D projects, and they form a key component in the *Strategic Research Agenda for Europe's Electricity Networks of the Future*, available at http://ec.europa.eu/research/energy/pdf/smartgrids_agenda_en.pdf.

The EU Microgrids Research Project

At the EU international level, two major research efforts have been devoted exclusively to microgrids. Within the 5th Framework Programme (1998–2002), the *Microgrids: Large Scale Integration of Micro-Generation to Low Voltage Grids* activity was funded at €4.5 million. The Consortium, led by the National Technical University of Athens (NTUA), included 14 partners from seven EU countries, including utilities such as EdF (France), PPC (Greece), and EdP (Portugal); manufacturers, such as EmForce, SMA, GERMANOS, and URENCO; plus research institutions and universities such as Labein, INESC Porto, the University of Manchester, ISET Kassel, and Ecole de Mines. The RD&D objectives set were to:

- ✔ study the operation of microgrids to increase penetration of renewable and other DERs while reducing carbon emissions
- ✔ study the operation of microgrids in parallel with the grid and islanded, as may follow faults
- ✔ define and develop control strategies to ensure efficient, reliable, and economic operation and management of microgrids
- ✔ define appropriate protection and grounding policies to assure safety, fault detection, separation, and islanded operation
- ✔ identify and develop the required telecommunication infrastructures and protocols
- ✔ determine the economic benefits of microgrid operation and propose systematic methods to quantify them
- ✔ simulate and demonstrate microgrid operation on laboratory scales.

The project was successfully completed, providing several innovative technical solutions. Project highlights include the development of:

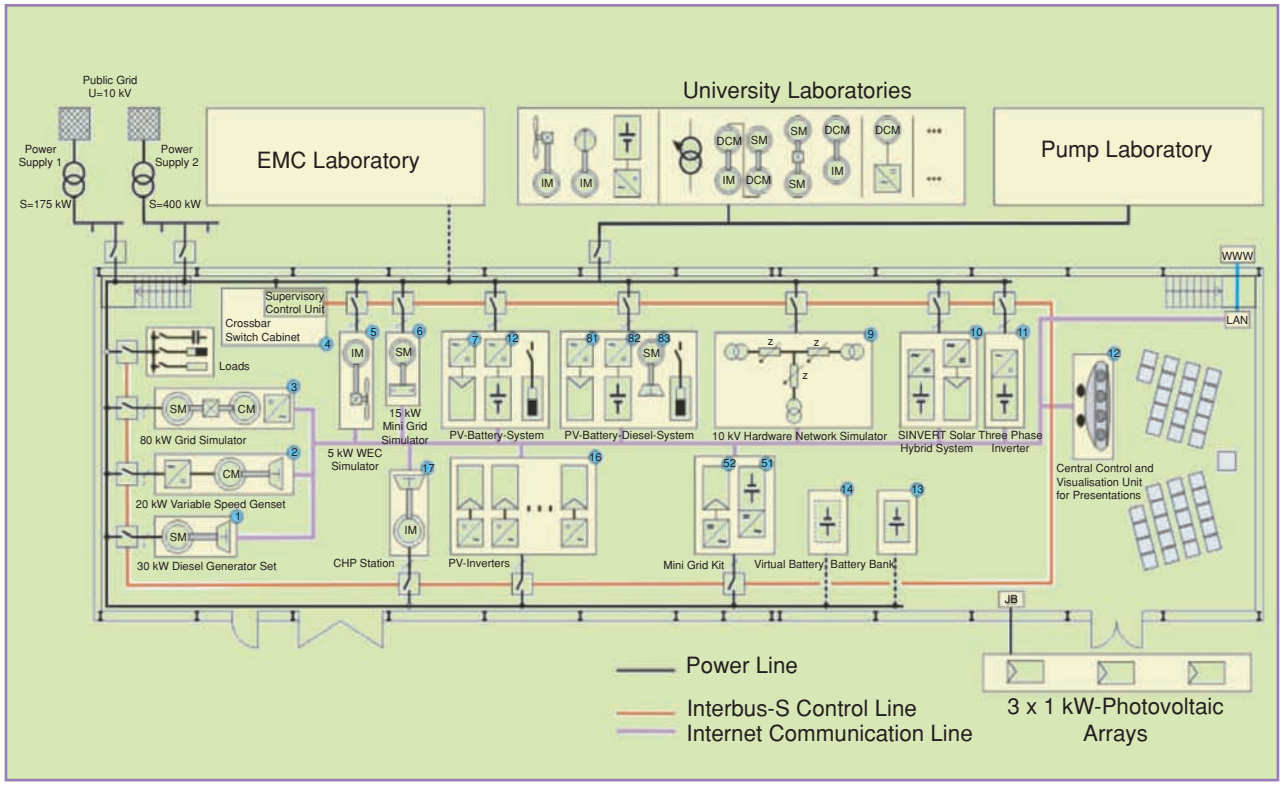

figure 1. The microgrid laboratory facilities at ISET (source: ISET).

- ✔ DER models plus steady-state and dynamic analysis tools enabling simulation of LV asymmetrical, inverter-dominated microgrid performance
- ✔ islanded and interconnected operating philosophies
- ✔ control algorithms, both hierarchical and distributed (agent based)
- ✔ local blackstart strategies
- ✔ definitions of DER interface response and intelligence requirements
- ✔ grounding and protection schemes
- ✔ methods for quantification of reliability benefits
- ✔ laboratory microgrids of various complexities and functionalities.

Several levels of centralized and decentralized control were explored at the participating laboratories of ISET (Germany), the University of Manchester (U.K.), Ecole de Mines (France), and NTUA (Greece), and relative benefits were identified. The ISET laboratory is shown in Figure 1.

The EU More Microgrids Research Project

A follow-up project titled *More Microgrids: Advanced Architectures and Control Concepts for More Microgrids* within the 6th Framework Programme (2002–2006) was funded at €8.5 million, and is in progress. This second consortium, again led by NTUA, comprises manufacturers, including Siemens, ABB, SMA, ZIV, I-Power, Anco, Germanos, and EmForce; power utilities from Denmark, Germany, Portugal, the Netherlands, and Poland; and research teams from Greece, the United Kingdom, France, Spain, Portugal, and Germany. The new objectives include:

- ✔ investigation of new DER controllers to provide effective and efficient operation of microgrids
- ✔ development of alternative control strategies using next-generation information and communications technology
- ✔ creation of alternative network designs, including application of modern protection methods, modern solid-state interfaces, and operation at variable frequencies
- ✔ technical and commercial integration of multiple microgrids, including interface of several microgrids with upstream distribution management systems, plus operation of decentralized markets for energy and ancillary services
- ✔ standardization of technical and commercial protocols and hardware to allow easy installation of DERs with plug-and-play capabilities
- ✔ studying the impact on power system operation, including benefits quantification of microgrids at regional, national, and EU levels of reliability improvements, reduction of network losses, environmental benefits, etc.

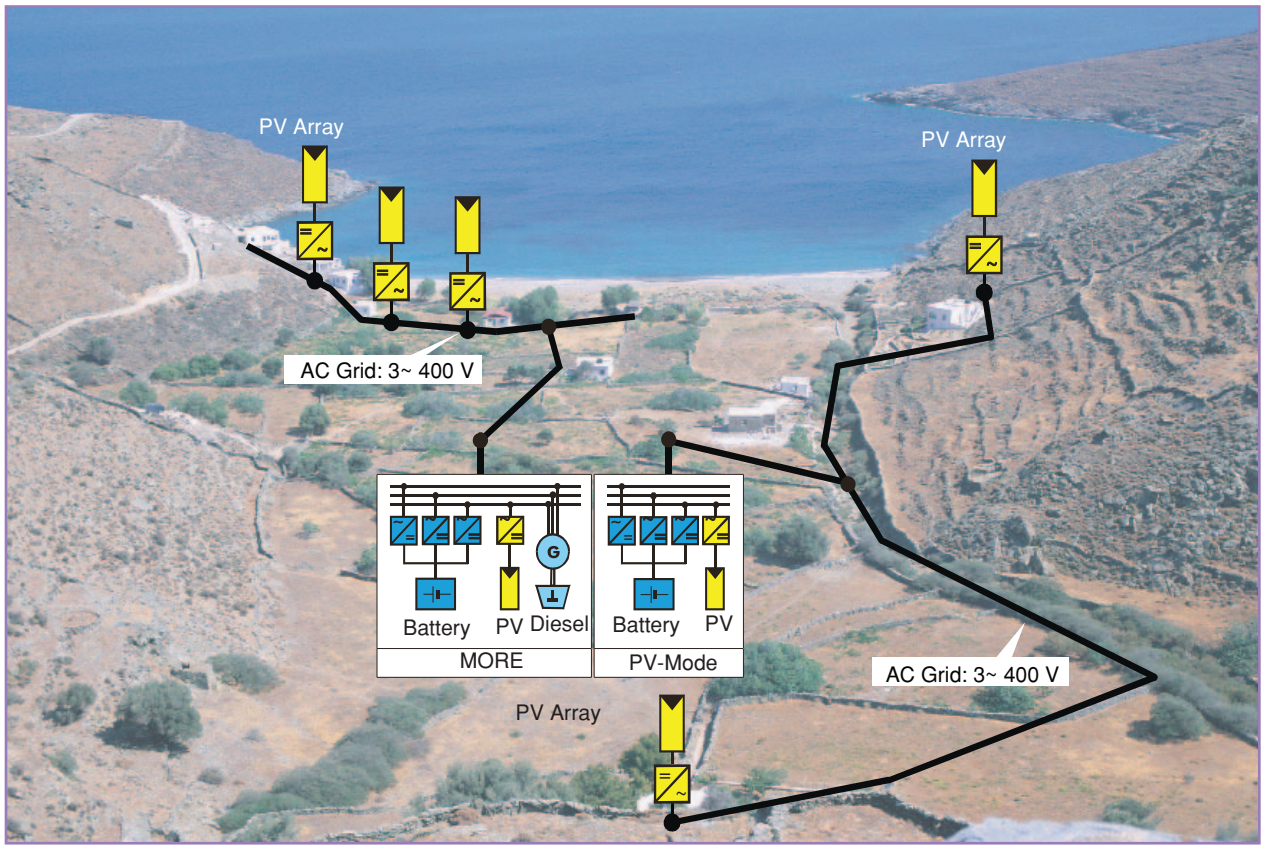

figure 2. Pilot Kythnos microgrid.

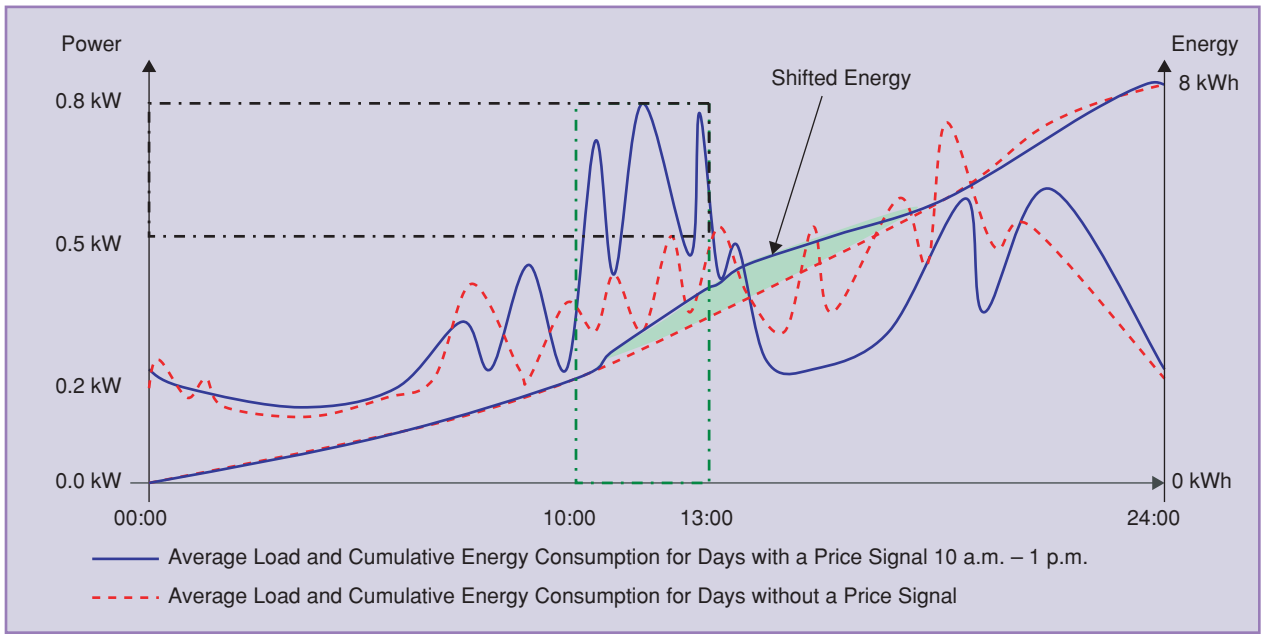

figure 3. *Washing with the Sun* encouraged customers to shift loads to high solar generation periods (source: MVV Energie).

- ✔ exploring the impact on the development of electricity network infrastructures, including quantification of the benefits of microgrids, to the overall network, and to the reinforcement and replacement strategy of the aging EU electricity infrastructure
- ✔ executing extensive field trials of alternative control strategies in actual installations, with experimental validation of various microgrid architectures in interconnected and islanded modes, and during transition testing of power electronics components and interfaces and of alternative control strategies, communication protocols, etc.

EU Demonstration Sites

Pilot installations include the following demonstration sites:

Greece: The Kythnos Island Microgrid.

This system, shown in Figure 2, electrifies 12 houses in a small valley on Kythnos, an island in the Cyclades Archipelago, of the Aegean Sea. The generation system comprises10 kW of PV, a nominal 53-kWh battery bank, and a 5-kW diesel genset. A second PV array of about 2 kW, mounted on the roof of the control system building, is connected to an SMA inverter and a 32-kWh battery bank to provide power for monitoring and communication. Residential service is powered by three SMA battery inverters connected in a parallel master-slave configuration forming one strong single-phase circuit. More than one of the 3.6-kW battery inverters is used only when more power is demanded by consumers. The battery inverters can operate in frequency droop mode, allowing information flow to switching load controllers if the battery state of charge is low, and limiting the power output of the PV inverters when the battery bank is full.

Netherlands: Continuon's MV/LV facility.

Continuon operates a holiday camp with more than 200 cottages, equipped with grid-tied PV totaling 315 kW. The cottages are connected to an MV/LV transformer using four approximately 400-m feeders. Daytime loads are low, so most of the PV power is injected into the MV grid. During the evening and night, support from the grid is needed. High voltages at the end of the feeder and a high level of voltage distortion during high PV output have been noted. With the microgrid islanded, improvements in power quality are sought using power electronic flexible ac distribution systems and storage.

Germany: MVV Residential Demonstration at Mannheim-Wallstadt.

The 1,200-inhabitant ecological estate in Mannheim-Wallstadt has been prepared for a continuous long-term field test site for the More Microgrids project. A total of 30 kW of PV has already been installed by private investors, and further DERs are planned. The first goal of the experiment has been to involve customers in load management. During a summer of 2006 2-month trial, more than 20 families and one municipal daycare center participated in the *Washing with the Sun* program (Figure 3). Based on PV output availability information in their neighborhood, customers shifted their loads to times when they could use solar electricity directly. As a result, participating families shifted their loads significantly from the typical residential evening peak toward hours with higher solar insolation, and from cloudy days toward sunny days.

In addition to the activities described, other demonstrations are taking place in Denmark, Italy, Portugal, and Spain. Also, it should be noted that in addition to EU-funded RD&D, there are several activities supported by national or regional

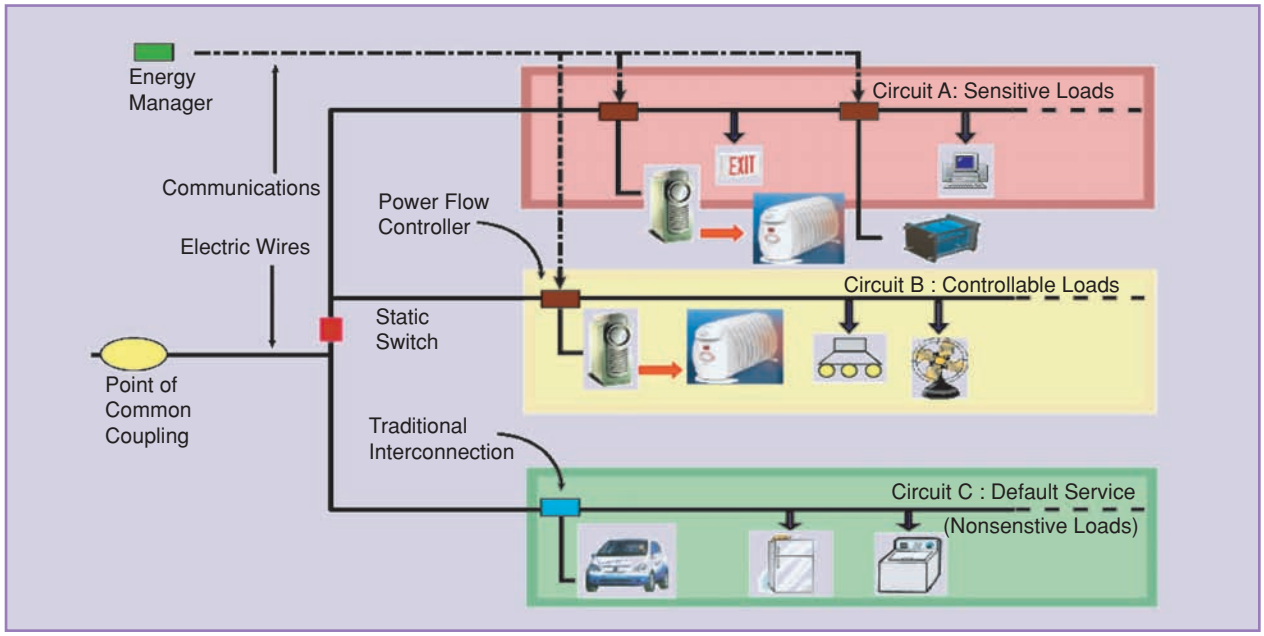

figure 4. Schematic of an example CM (source: CERTS).

governments under way in Germany, Spain, the United Kingdom, the Netherlands, and elsewhere.

RD&D Activities in the United States

The United States has had a modest but slowly expanding microgrids research program for a number of years, supported both by the U.S. Department of Energy (DOE) under the Office of Electricity Delivery and Energy Reliability (OE), and by the California Energy Commission (CEC) through its Public Interest Energy Research Program. Heightened demand for high PQR in the U.S., primarily to match the high end of heterogeneous end-use requirements, has naturally led to increased focus on enhancing PQR locally using microgrids.

CERTS Microgrid Introduction

The most well-known U.S. microgrid RD&D effort has been pursued under the Consortium for Electric Reliability Technology Solutions (CERTS) (see http://certs.lbl.gov), which was established in 1999 to explore implications for power system reliability of emerging technological, economic, regulatory–institutional, and environmental influences. From the inception of CERTS, the likely emergence of DG was recognized as an important factor, and it has been a focus of the CERTS RD&D agenda. The specific concept of the CERTS Microgrid (CM) was fully developed by 2002, when it was described in a white paper and presented at a CEC Workshop. Subsequently, building physical examples was undertaken.

The CM, as with most microgrid paradigms, is intended to, as seamlessly as possible, separate from normal utility service during a disruption and continue to serve its critical internal loads until acceptable utility service is restored. The CM provides this function for relatively small sites (~<2 MW peak) without need for costly fast electrical controls or expensive site-specific engineering. No single device is essential for operation, creating a robust system.

Figure 4 shows an example CM, whose salient features are:

- ✔ *a lack of fast electrical controls.* The operation of generators is controlled locally by power electronic devices incorporating droop characteristics that respond to locally monitored frequency and voltage. Consequently, devices that naturally require a power electronic interface, e.g., dc sources, are particularly amenable to incorporation in a CM.
- ✔ *a single point of common coupling (PCC), and does not export.* To the utility the CM appears as a single

figure 5. Layout of the Dolan Technology Center CM test bed (June 2006) (source: CERTS).

figure 6. Prime movers and associated power electronics at Dolan (source: CERTS).

controlled load, no different than similar "customers."

- ✔ *an explicit design to provide heterogeneous PQR.* This appears in the diagram as varying reliability on the three circuits. Circuit C is exposed to normal grid power; however, in the event of inadequate grid power quality, e.g. voltage sag, the static switch opens and circuits A and B are served as an intentional island until acceptable power quality is restored.
- ✔ *a dispersed plug-and-play system.* No custom engineering is required for interconnection of any single device, as long as it has CM capability, making system configuration flexible and variable. Generators may not only be spread across circuits, they may be physically placed around the site, quite possibly co-located with convenient heat sinks that offer economically attractive CHP opportunities.
- ✔ *generic slow controls.* Other control functions, e.g., maintaining economic dispatch, are achieved by a slow control network represented in Figure 4 as the *Energy Manager*, which could be of many types; e.g., an add-on to a legacy building energy management system.

CERTS Microgrid Test Bed

The viability of the CM has been well demonstrated in simulation and through bench testing of a laboratory scale test system at the University of Wisconsin, Madison. For some time, it has been the CERTS objective to carry out full-scale testing of the CM concept before deploying it at an actual site. To accomplish this, a full-scale test has recently been installed at the Dolan Technology Center in Columbus Ohio, which is operated by American Electric Power, one of the largest U.S. electricity utilities.

Figure 5 shows the layout of the test bed. The large white building at left contains the prime movers, three Tecogen (http://www.tecogen.com/) 60-kW gensets based on a production General Motors 7.5 L engine, as shown in Figure 6. While these units have been typically installed as synchronous machines, the models used here have power electronic capability originally intended to enable variable speed operation enhanced with CM capabilities. The large cabinet to the bottom left contains the static switch, while the others seen in the picture contain the various switchgear and monitoring equipment needed to fully exercise the CM and record its performance during scheduled test procedures. Progress of the testing can be followed at http://certs.aeptechlab.com/.

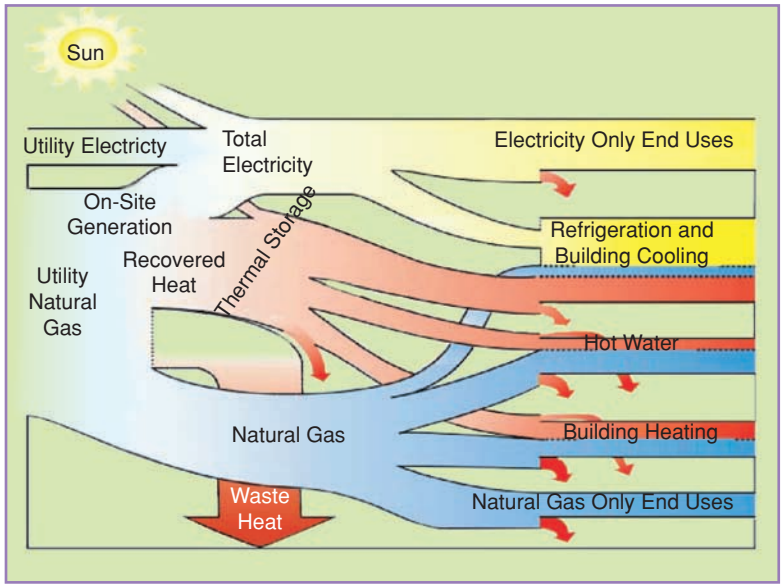

figure 7. Energy flows within a microgrid (source: Berkeley Lab).

Other CERTS Microgrid Activities

One notable feature of the CM project has been simultaneous RD&D into necessary tools for microgrid deployment, other than the actual electrical hardware. Two major products of this unified approach are the μGrid Analysis Tool (μGrid), under development at the Georgia Institute of Technology, and the Distributed Energy Resources Customer Adoption Model (DER-CAM) in use at Berkeley Lab and several other RD&D facilities worldwide.

The CM as described above presents unique electrical analysis challenges. The

unique characteristics of the CM are that it may contain three-phase (three-, four-, and/or five-wire systems), single-phase (two- and/or three-wire), and two-circuit secondary circuits (three- and/or four-wire) systems, and a variety of sources interconnected by power electronic devices employing different control approaches. Existing analysis methods are not adequate for analyzing microgrids like the CM, and consequently μGrid has been developed with the capability of performing all the necessary electrical analysis needed to design microgrids. μGrid captures all of the key physical phenomena of three-, four-, or five-wire circuits, involving both three-phase and single-phase circuits, while loads can be simulated in direct-phase quantities using physically based models. The modeling approach enables analysis of a variety of issues particularly relevant to microgrids, such as prediction and evaluation of imbalances, asymmetries, evaluation of derating due to imbalances and asymmetries, estimation of stray voltages and ground potential rise, etc., as well as dynamic interaction of the various components and their effect on system stability, generation-load control (frequency control), and dynamic voltage (VAR control). Predicting stray voltages and currents as well as ground potential rise of neutrals and safety grounds are of paramount safety importance since microgrids may be installed in a dispersed manner across publicly accessible areas. A key dynamic analysis problem concerns the design and control algorithms of power electronic interfaces (converters), for which possibilities are numerous. μGrid includes some typical control schemes and capability for modeling additional schemes that may be introduced by DERs manufacturers.

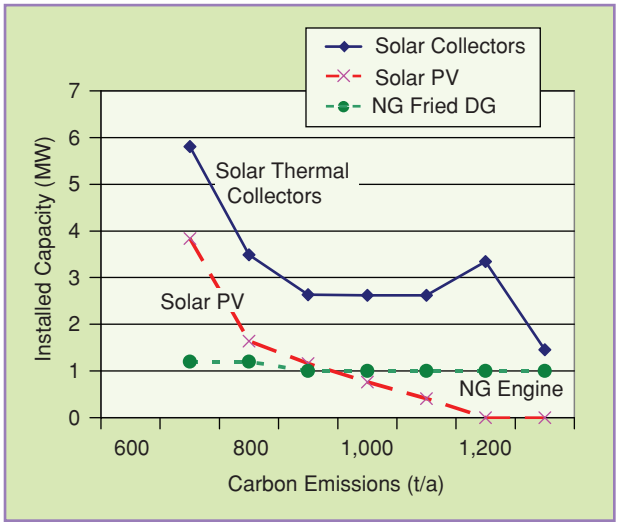

figure 8. Optimal equipment results under carbon emissions constraints (source: Berkeley Lab).

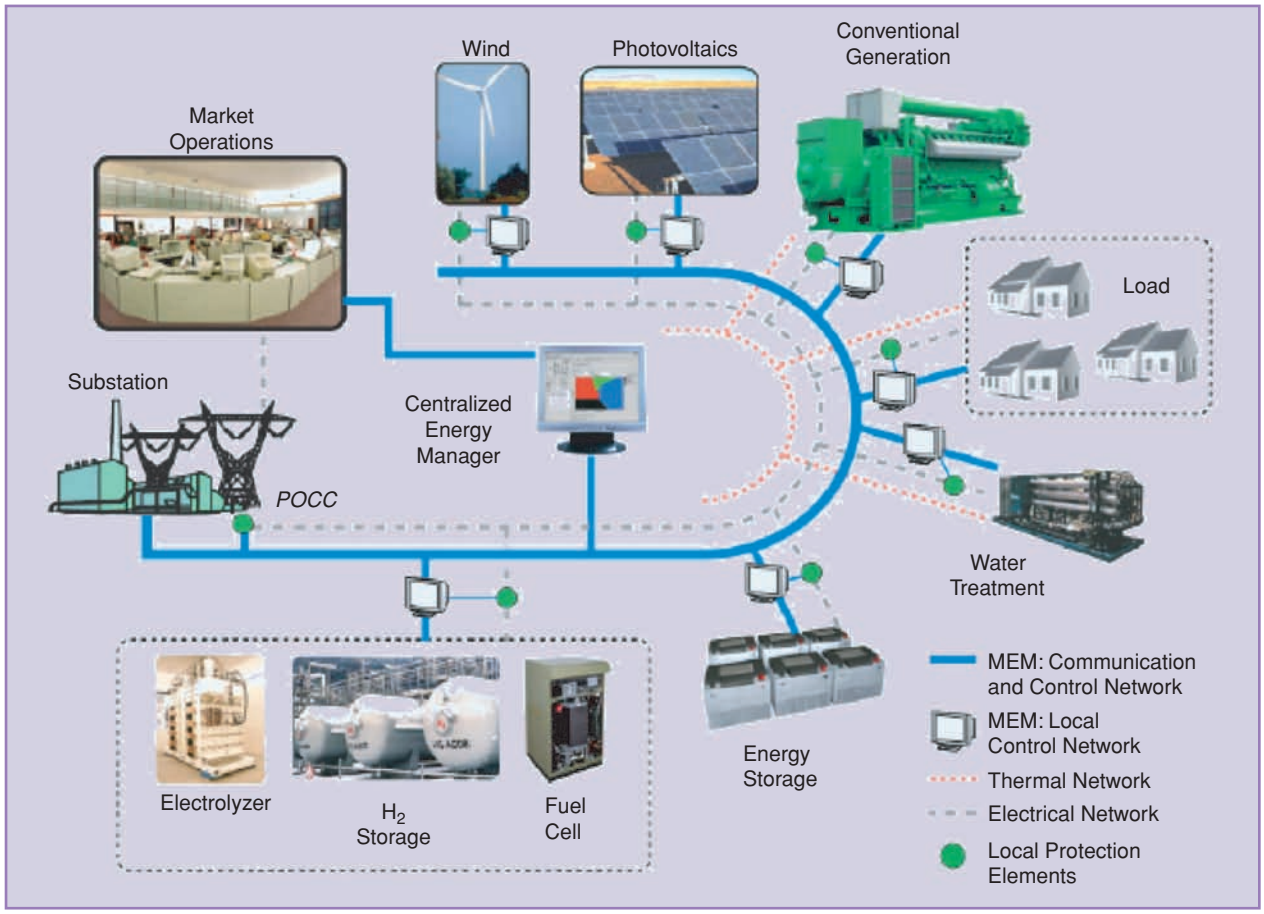

figure 9. GE MEM framework (source: GE Global Research).

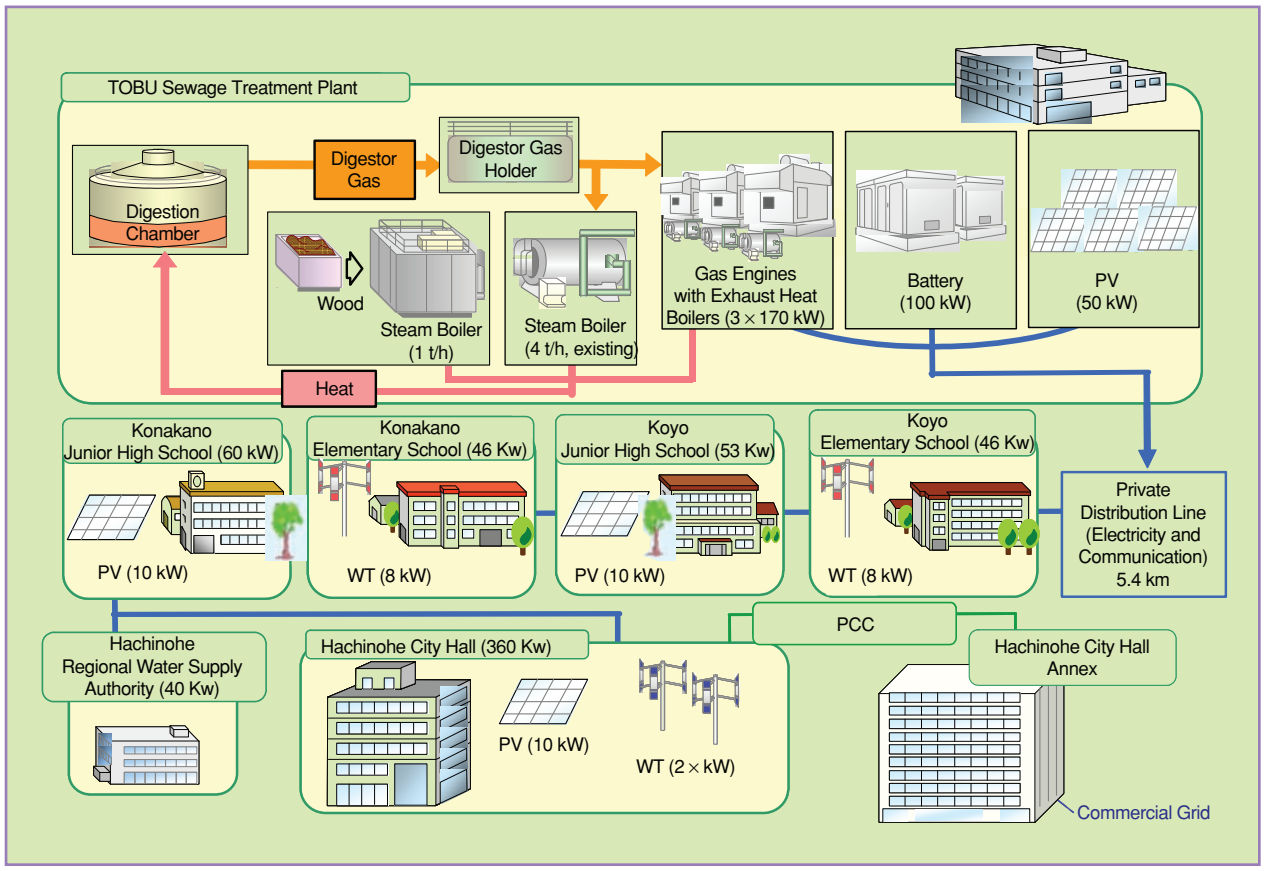

figure 10. Overview of the Aomori project (source: Y. Fujioka, et. al., 2006, in further reading).

DER-CAM is a fully technology-neutral optimizing model of economic DER adoption, written in the General Algebraic Modeling System software. Its objective is to minimize the cost of operating on-site generation and CHP systems, either for an individual customer site or a microgrid (http://der.lbl.gov). Figure 7 shows some of the major energy flows within a microgrid, from fuel inputs to the left to useful energy end-uses to the right. DER-CAM chooses the cost-minimizing equipment installation from an arbitrary list of available technologies that could include solar thermal or PV, thermal and electrical storage, any thermal prime mover, heat recovery devices, and CHP equipment including absorption cooling. Since it finds the optimal solution, the simultaneity of CHP-powered cooling with absorption chillers is considered so that, for example, the benefit of downsizing generator capacity is traded off against the cost of nonelectrical cooling equipment. An idealized operating schedule including grid and other fuel purchases is also produced.

Figure 8 shows DER-CAM results for a huge building in the hot southeastern part of California. Without any concern for carbon emissions, this site emits about 1,275 t/a of elemental carbon including emissions incurred by utility-delivered electricity. DER-CAM chooses a 1-MW natural gas genset and 1.4 MW of solar thermal heat recovery for this operating condition. Moving leftward along the x-axis represents tighter and tighter carbon caps imposed on this site. For example, at a 1,000-t/a cap, the optimal system still includes the thermal generator, but with additional solar thermal capacity of about 2.7 MW, and also 900 kW of PV. Using DER-CAM in this way, the economically optimal combination of equipment to install in a microgrid can be found, given environmental and other constraints.

GE Global Research Microgrid

DOE also co-funds with General Electric (GE) a second, separate two-year, approximately US$4 million microgrid effort led by GE Global Research. GE aims to develop and demonstrate a microgrid energy management (MEM) framework for a broad set of microgrid applications that provides a unified controls, protection, and energy management platform (Figure 9). At the asset level, MEM is intended to provide advanced controls for both generation and load assets that are robust with respect to low-inertia environments. At the supervisory level, MEM will optimize the coordinated operation of interconnected assets in the microgrid to meet customer objectives such as maximizing operational efficiency, minimizing cost of operation, minimizing emissions impact, etc., and is also intended to enable integration of renewables and microgrid dispatchability.

The program is being executed in two phases. The completed Phase I of the program focused on fundamental controls and energy management technology development guided through the use of case studies considered to have market potential. These technologies were validated in simulation on a detailed model of a microgrid field demonstration to be executed in Phase II. A multibuilding campus will be selected to demonstrate the technologies in a real-world application. Upon installation of equipment, validation and verification experiments to prove the advanced microgrid functionality will be executed, with scheduled completion of the project in mid 2008.

This program is complementary to many of the concurrent research programs in this area. For example, whereas the CERTS program is focused on the design of local, robust controls for DER in microgrids, the bulk of the GE work focuses on the development of the outer loop supervisory controls that optimize energy utilization and operating costs and manage the integration of intermittent renewable energy resources such as wind and solar energy.

Other U.S. Microgrid RD&D

Finally, it should be mentioned that many other RD&D activities under way in the United States not explicitly sailing under the microgrid flag are nonetheless developing standards, methods, and technologies that will support microgrid deployment. Three of these are described below.

Primarily funded by the CEC, the first full-scale integration test of commercial-grade utility grid interactive DERs in the United States, the Distributed Utility Integration Test (DUIT), addresses a key technical issue, namely the electrical implications of operating multiple and diverse DERs at high penetration levels in utility distribution networks (http://www.dua1.com/DUIT). Thorough testing is planned of the feasibility and value of co-location and integration of DERs into the electric distribution system.

IEEE Standards Coordinating Committee 21 is currently supporting the development of *IEEE P1547.4, Draft Guide for Design, Operation, and Integration of Distributed Resource Island Systems with Electric Power Systems*. Currently in an initial draft stage, this document is intended to cover microgrids or intentional islands containing DERs connected to both local and area islanded electric power systems (EPS). This document provides alternative approaches and good practices for the design, operation, and integration of the microgrid, including the ability to separate and reconnect, while providing power to the islanded local EPSs. This guide includes the distributed resources, interconnection systems, and participating electric power systems, and it is intended to be used by EPS

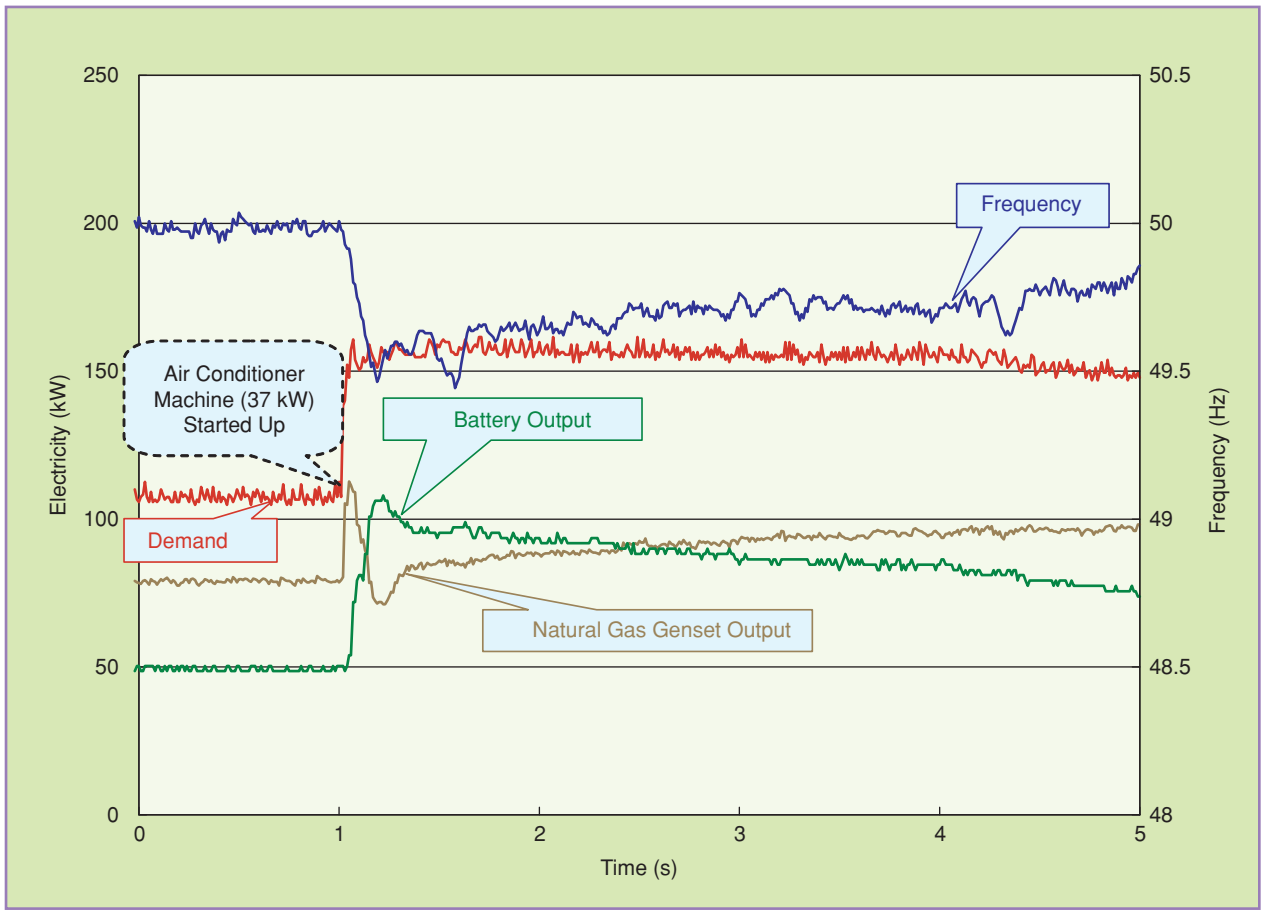

figure 11. Frequency control characteristics in islanded operation (source: Y. Fujioka, et. al., 2006, in further reading)

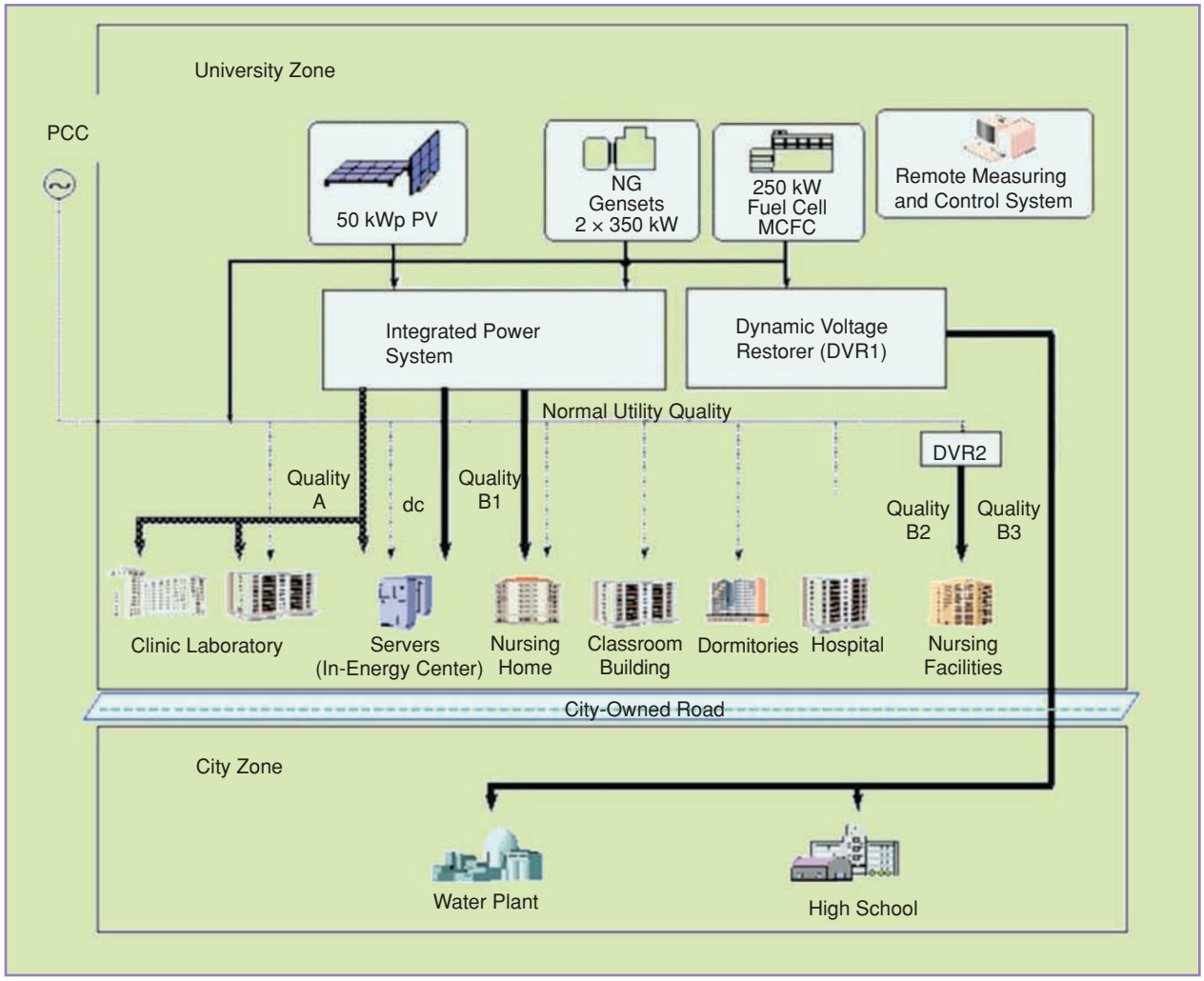

figure 12. System configuration of the Sendai demonstration project (source: K. Hirose et. al., 2006, in further reading).

designers, operators, system integrators, and equipment manufacturers. Implementation of this guide will expand the benefits of using DERs by targeting improved electric power system reliability and build upon the interconnection requirements of *IEEE 1547-2003, Standard for Interconnecting Distributed Resources with Electric Power Systems*.

Northern Power and the National Renewable Energy Laboratory (NREL) have completed a project that examines the regulatory and technical issues associated with installation and operation of a microgrid in rural Vermont. Northern Power worked with the local electricity utility to predict the impact and effects of the microgrid at the end of a low capacity distribution feeder with the poor PQR typical of rural areas.

RD&D Activities in Japan

Japan is the current world leader in microgrid demonstration projects. The Japanese government has set ambitious targets for increasing the contribution of renewable energy sources, such as WT and PV, but the fluctuating power of renewable energy sources might degrade the country's outstanding PQR. Traditionally, customers that operate fossil fuel-fired DERs, such as natural gas gensets with CHP do so base-loaded at rated power. Others that use intermittent renewable sources balance supply and demand through purchased grid power. In either case, residual purchases from the grid are volatile. Conversely, a microgrid can contribute load-following capability to a utility grid by balancing its own energy requirement using controllable prime movers to balance fluctuating load and renewable output. For example, a microgrid with electrical storage and/or gensets can potentially fully compensate for its intermittent renewable supply and present itself to the grid as a constant load. This principle has motivated much of the RD&D in Japan, and has led to an emphasis on controls and electrical storage.

NEDO Microgrid Projects

The New Energy and Industrial Technology Development Organization (NEDO), the research funding and management

agency of the Ministry of Economy, Trade, and Industry, started three demonstrations under its *Regional Power Grid with Renewable Energy Resources Project* in 2003. These field tests focus on the integration of new energy sources into a local distribution network. Proposed microgrid projects in Aomori, Aichi, and Kyoto Prefectures qualified for the program, and all have a significant renewable energy component.

The Aomori Project in Hachinohe

This microgrid was put into operation in October 2005 and is being evaluated for PQR, cost effectiveness, and GHG emission reductions over a planned demonstration period lasting until March 2008. Figure 10 gives an overview of the microgrid. A central feature of the system is that only renewable energy sources, including PV, WTs (together totaling 100 kW), and biomass, are used to supply electricity and heat. The controllable DERs consist of three 170-kW gensets (510 kW total) burning sewage digester gas, a 100-kW lead-acid battery bank, and a 1.0-t/h woody biomass boiler. The microgrid serves seven City of Hachinohe buildings. These facilities are interconnected through a 6-kV, 5.4-km duplicate distribution line, with the whole system connected to the commercial grid at a single PCC. From November 2005 and July 2006, primary energy consumption was reduced by 57.3%, thanks to reduced electricity purchases, while carbon emissions were also reduced by 47.8%. A weeklong islanding test is planned during the project period.

The energy management system developed through this project optimally meets building demands for electricity and heat by controlling the output of the gensets and boilers, together with the charging and discharging of the battery bank. The control objective is to minimize operating costs and CO_2 emissions while maintaining constant power flow at the PCC.

Figure 11 shows frequency test results during a preliminary islanded operation. This microgrid is connected to the commercial grid, but the test islanding operation was implemented to verify power quality control in more detail. During the period shown in the figure, the microgrid disconnected, then with the load at around 100 kW, a 37-kW air conditioner was started. Although frequency drops lower than acceptable for commercial grids in Japan, the target of maintaining the frequency within 50 ± 0.5 Hz was almost achieved.

The Aichi Project near the Central Japan Airport

The first NEDO demonstration project started operation at the site of the 2005 World Exposition in March 2005. The system was moved to the Central Japan Airport City near Nagoya in 2006, where it began operation in early 2007. It now supplies a Tokoname City office builging and a sewage plant via a private distribution line. Its main feature is a combination of the following fuel cells as the main sources: two [270-kW and 300-kW molten carbonate fuel cells (MCFCs)], four 200-kW phosphoric acid fuel cells (PAFCs), and a 50-kW solid oxide fuel cell (SOFC). The MCFCs use biogas

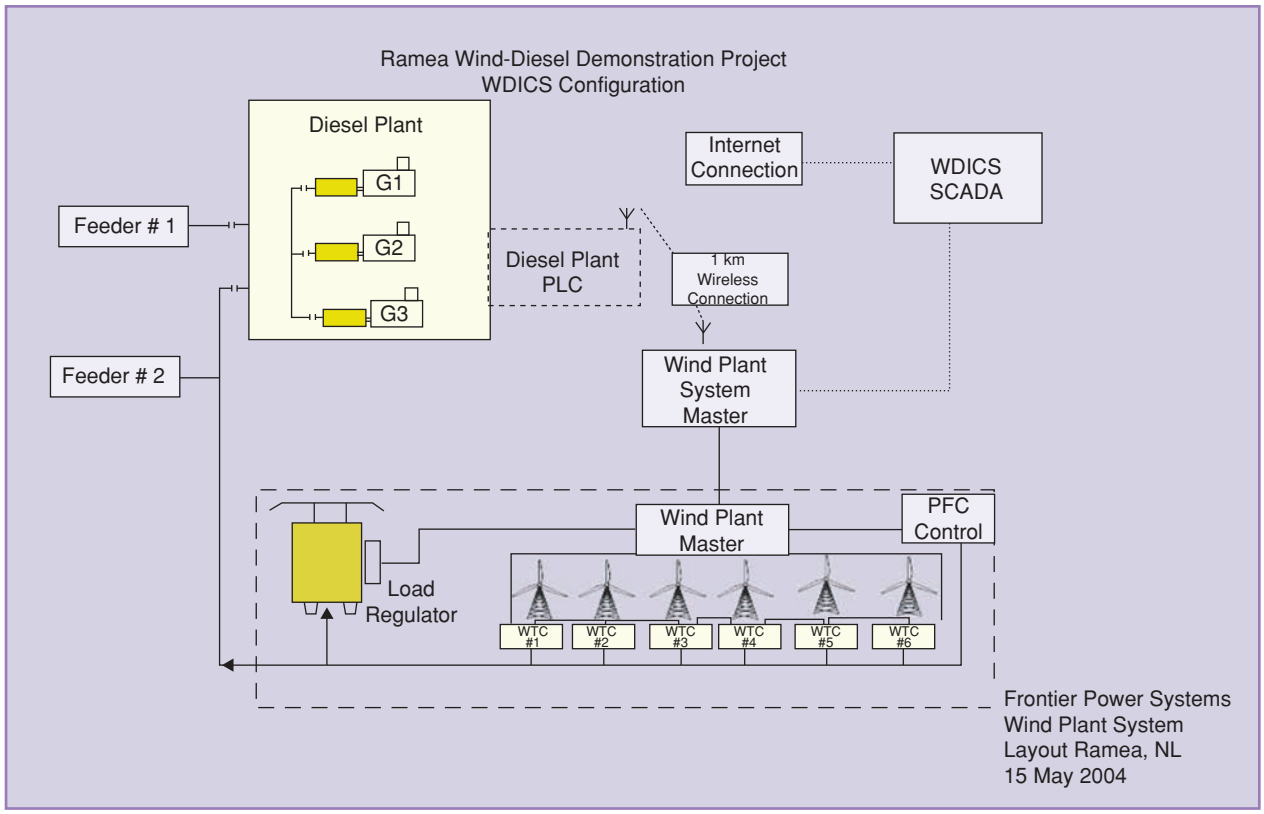

figure 13. Ramea integrated wind-diesel project (source: CANMET).

While the application of DERs can potentially reduce the need for traditional system expansion, controlling a potentially huge number of DERs creates a daunting new challenge for operating and controlling the network safely and efficiently.

generated from high temperature (1,200 °C) treatment of wood waste and plastic bottles. Both the MCFCs and SOFC are baseloaded while the PAFCs load follow. Total PV capacity is 330 kW, and a 500-kW NAS battery is used for balancing. Experiment results of intentional islanding mode have also been obtained.

The Kyoto Project at Kyotango

The municipal government of Kyotango City, north of Kyoto, leads this first virtual microgrid demonstration project covering a 40-km span called the *Kyoto Eco Energy Project*, which started operation in December 2005. It incorporates the following generation capacities: 50-kW of PV, 50 kW of WTs, 5 × 80-kW biogas gensets, a 250-kW MCFC, and a 100-kW battery bank. An energy control center communicates with the DERs by internet protocol over the legacy telecom network to balance demand and supply, and energy is fed into the legacy distribution system. Imbalances can currently be rectified over 5-minute time-steps, and shorter ones are planned.

NEDO's Sendai Project Under Its Advanced Regional Electricity Network Program

In Sendai, NEDO also sponsors a multiple PQR service demonstration which was completed in October 2006. The purpose of this research is to demonstrate multiple simultaneous PQR supply, as may be requested by a range of customers. Over the research period of 2004–2008, the goals are:

- ✔ to prove that multiple power quality levels can be supplied simultaneously by a microgrid
- ✔ to compare the economic viability of the multiple PQR approach compared conventional uninterruptible power supply (UPS) equipment.

The system configuration is shown in Figure 12. The *Energy Center* and distribution line are installed and connected to the utility line at a single PCC. The major DERs are a 250-kW MCFC, two 350-kW natural gas gensets, and a 50-kW battery bank. The microgrid directly serves some dc loads and additionally supplies four different qualities of ac service to a university, a high school, and a sewage plant. Premium quality A service is never interrupted and is conditioned by voltage and waveform correction. A B service is supplied at three qualities, the differences based on backup during utility grid outages. The highest quality B1 supply is backed up by storage, while B2 is backed up by a genset, and B3 is not backed up. If the grid has a momentary voltage sag or outage, the switch-over time for the highest quality B service is less than 15 ms. The cost of supplying multiple power quality levels must be less than that of existing UPS, save space, and reduce low power loss.

The integrated power system consists of a two-way mode power module, dc-ac inverter, dc-dc converters, and a battery bank. In an outage, the battery becomes a power source and feeds to each connected load. The electric power to the highest quality, B1, load is supplied by the two-way mode power module. The power flows of premium quality A and dc do not change, and the feed of stable electric power continues without an outage. A dynamic voltage restorer is used for B2, while B3 equipment is limited to momentary voltage dip compensation.

Private Sector Microgrid RD&D

In addition to the government-sponsored projects described above, significant private sector research activities are also in progress. Shimizu Corporation, a major commercial building construction company, with the cooperation of the University of Tokyo, is developing a microgrid control system using a test microgrid at its research center in Tokyo. The DERs include two natural gas gensets of 90 kW and 350 kW, 4 × 100-kW-400-kJ electric double layer capacitors, and a 200-kW × 2-h NiMH battery bank. The principle project objective is to develop an optimum operation and control system. The target market includes urban developments, university campuses, and high PQR demanding facilities, such as hospitals, banks, data centers, etc.

Tokyo Gas also aims to establish distributed energy networks including microgrids within its service territory. A microgrid is under development that again utilizes controllable prime movers such as natural gas gensets to compensate for fluctuating demand and renewable output. Costly battery capacity can also be reduced if gensets can compensate for fluctuating renewable output. Partnering with the University of Tokyo, Tokyo Gas is developing an integrated DER control system based on simulation studies and experiments at its test facility in Yokohama. The test facility includes 2 × 25-kW and 2 × 9.9-kW natural gas gensets, 2 × 6-kW WTs, 10 kW of PV, batteries, and a biogas engine is under development. This microgrid will also supply three PQR levels to a building of the Yokohama Research Institute.

In Japan, multiple field tests of microgrids are demonstrating the technical feasibility of microgrids with a focus

on incorporating renewable energy while maintaining constant grid inflows, and on providing multiple levels of PQR, but clear economic and environmental benefits have not yet been demonstrated. The economic evaluation of the microgrids is still challenging. A method for economic design and optimal operation of microgrids with renewable energy sources has been proposed by the University of Tokyo. An operating plan for a hybrid system consisting of PV and gensets with CHP has been modeled for an actual building complex consisting of a 25,000 m^2 office building and a 600-unit apartment building. When running costs are minimized, the optimal operating strategy reduces waste heat by adjusting the output of the gensets and purchasing low-cost off-peak electricity.

RD&D Activities in Canada

Microgrid-related RD&D activities in Canada are focused on MV. Most were initiated in universities or as part of the Decentralized Energy Production program managed by the CANMET Energy Technology Center in Varennes, near Montréal, funded by the Technology and Innovation program of Natural Resources Canada (NRCan). Microgrid-related RD&D projects in Canada are mostly carried out in collaboration with the electric utility industry, manufacturers, and other stakeholders in DER integration and utilization.

Microgrid-related RD&D in the Canadian universities has been either fully or partially supported by either the

- ✔ Federal Government of Canada through either the Natural Sciences and Engineering Research Council or NRCan or by
- ✔ provincial governments, such as the Ontario Ministry of Research and Innovation.

Microgrid related RD&D at the Canadian universities has primarily focused on:

- ✔ development of analytical tools to investigate performance of DERs and their host microgrid under various steady-state and dynamic operating modes, with special emphasis on asymmetrical conditions due to single-phase loads
- ✔ control and protection strategies for autonomous microgrid operation
- ✔ development of control/protection strategies and the corresponding algorithms for electronically-coupled DERs
- ✔ development of power balancing and energy management strategies and algorithms for a microgrid that includes multiple DERs
- ✔ investigation of dynamic phenomena associated with microgrid islanding and re-synchronizing
- ✔ development of islanding detection methods for parallel DERs in a microgrid
- ✔ parallel operation and interactions of electronically coupled DERs
- ✔ determination of the maximum viable penetration of DERs in a utility distribution system
- ✔ investigation of the impacts of high DER penetration in existing protection strategies, and identification of alternatives
- ✔ exploration of the role of communication technologies in operation, control, and protection of DERs and the host microgrid.

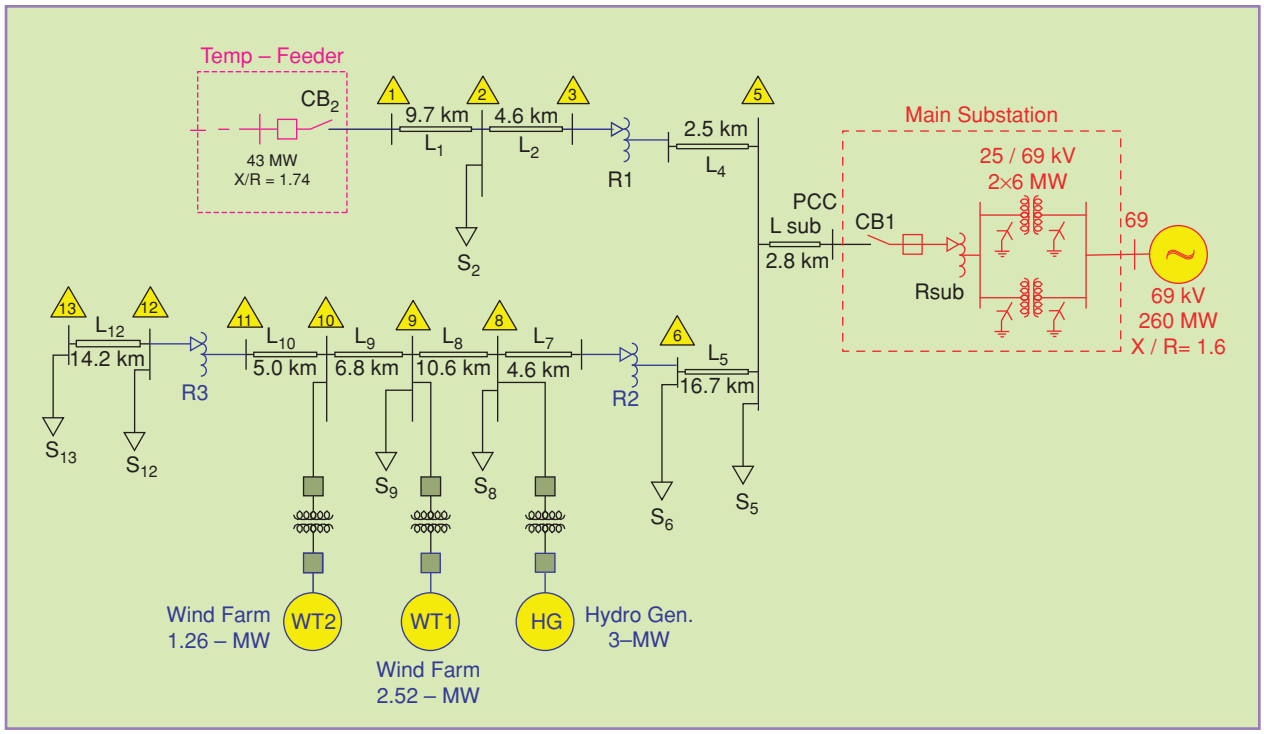

figure 14. Fortis-Alberta grid-tied microgrid (source: CANMET).

In addition to microgrid-related collaborative RD&D with university teams, NRCan also has established collaborations with the electric utility industry to conduct field tests and experiments on:

- ✔ autonomous microgrid applications for remote areas
- ✔ grid-interfaced microgrid applications
- ✔ planned microgrid islanding
- ✔ development of a MV test line for industrial-grade prototype testing and performance evaluation.

A brief explanation of these four microgrid related activities of CETC-V are as follows.

Remote Microgrids Applications

Applications of autonomous microgrids for remote locations are mainly for electrification of electrically nonintegrated areas, often geographical islands. Traditionally, remote and/or inaccessible communities in Canada have been electrically supplied almost exclusively by diesel gensets. In addition to reducing fuel costs, the main objective of autonomous microgrid applications is to investigate and develop field experience with planning and operating autonomous distribution grids that imbed multiple DR units of different types; e.g., diesel gensets, WTs, and PV. The results of research and field tests are used to identify technology requirements, and to promote electric utility acceptance of the microgrid concept.

An example of such a project is the Ramea wind-diesel system, which is shown in Figure 13. It is an autonomous diesel-based system with medium wind penetration. The system has a peak load of 1.2 MW, and the integrated wind installation is rated at 395 kW. While diesel remains ultimately responsible for supplying load, the system can absorb the total generated wind power as long as diesel units unit are loaded to at least 30% of their rated capacity.

The unique features of the Ramea project that contribute to microgrid RD&D are:

- ✔ investigation of impacts of the intermittent nature of wind power on frequency and voltage control in an autonomous system without the presence of energy storage
- ✔ exploration of the role of communications and SCADA in operation of a fully automated diesel-WT system, in particular with respect to energy management and instability issues
- ✔ analysis and control of power quality issues.

Grid-Connected Microgrid Applications

Key research objectives of grid-tied microgrids are to investigate full-scale development, field demonstration, and experimental performance evaluation of:

- ✔ frequency and voltage control methods/algorithms and the available technologies, under various microgrid operation modes
- ✔ transition between grid-connected and islanded modes, and vice versa
- ✔ high DER penetration and its impact on the host grid and interaction phenomena between DERs.

In this context, the Fortis-Alberta distribution system shown in Figure 14 has been identified as a grid-tied microgrid. The system comprises a 25-kV distribution network supplied by a 65-kV/25-kV substation normally connected to the substation as the PCC. One approach to maintaining supply during substation maintenance periods or subsequent to faults is to temporarily connect the distribution system to the 25-kV distribution feeder, marked *temp-feeder* in Figure 14, which is supplied from a 138-kV/25-kV substation.

An alternative approach to supply the load is to form an island on either the entire distribution feeder or a portion of

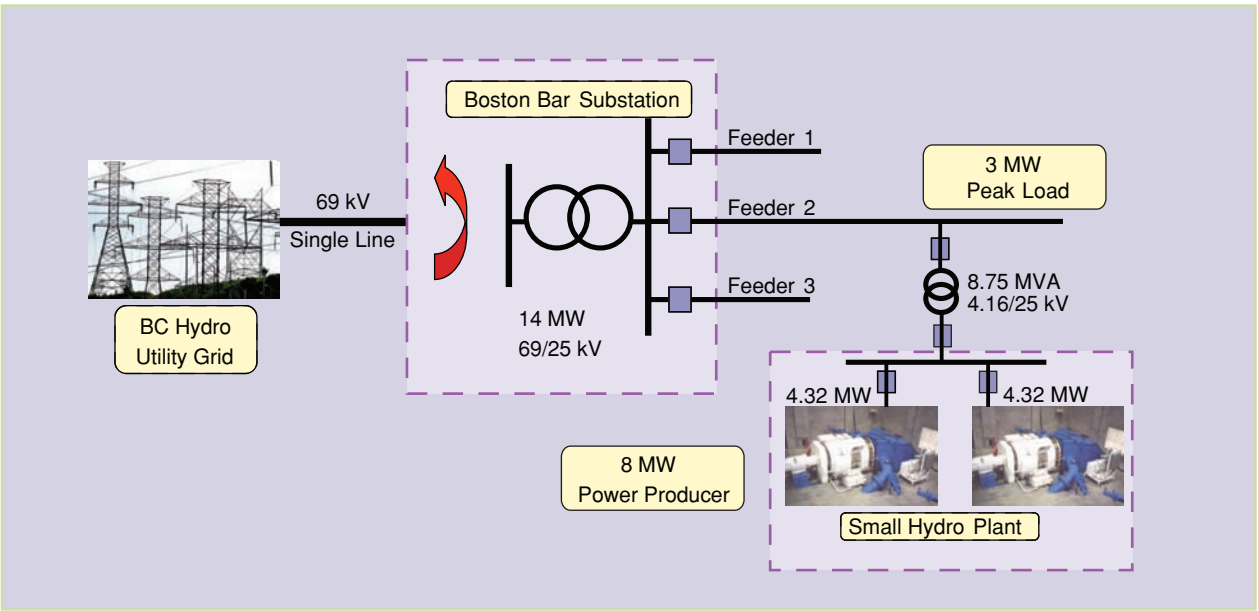

figure 15. BC Hydro Boston Bar microgrid (source: CANMET).

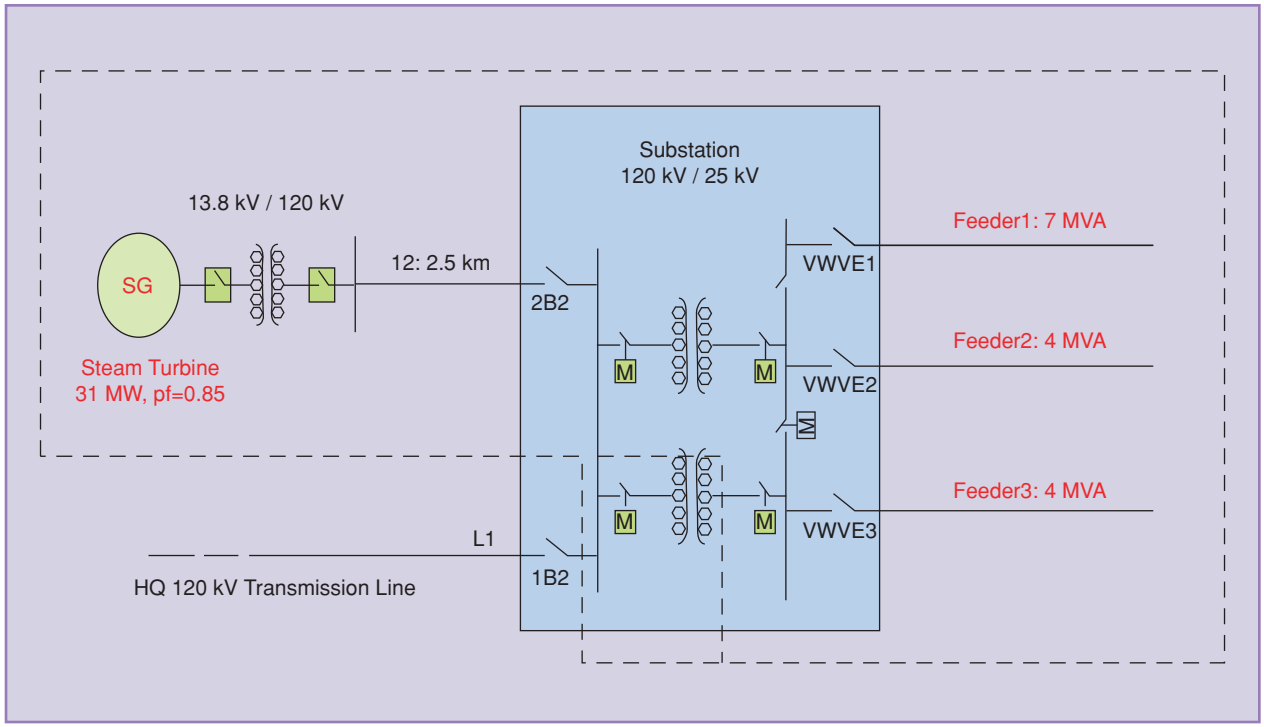

figure 16. HQ distribution system for planned islanding site (source: Hydro Québec).

it, depending on adequate availability of power from local DERs; however, slow response of the hydro unit and the intermittent nature of the WTs impose restrictions that permit only planned islanding. Furthermore, the wind intermittency and hydro water level dependency impose challenges for load following while islanded. Integration of fast-acting dispatchable DERs is an option to overcome these islanding operational issues.

Planned Microgrid Islanding

Planned islanding is a central element within the microgrid concept used to maintain continuity of supply during planned outages; e.g., substation maintenance periods. Figure 15 shows a one-line diagram of the British Columbia (BC) Hydro Boston Bar system that adopts planned islanding. The system is composed of a 69-kV/25-kV substation supplying three radial feeders. One feeder incorporates an 8.64-islanded-MW run-of-river hydro unit operated by an independent power producer (IPP) and a 3-MW peak load. The hydro units are equipped with the capability to accommodate planned islanding of the corresponding feeder, depending on generation availability, and the status of adjacent feeder(s).

The microgrid-related operating aspects of the project are:

- ✔ load management of the island, including the two adjacent feeders
- ✔ load-following capability with limited frequency fluctuations
- ✔ two modes of generator control and protection based on grid-connected and autonomous operating modes (after islanding generator protection is also extended to feeder protection)
- ✔ resynchronization capability to connect the autonomous island to the BC Hydro network without interruption
- ✔ black-start capability for the hydro unit using a 50-kW diesel genset.

A portion of the Hydro Québec (HQ) distribution system connected to the Senneterre substation is also under consideration for planned microgrid islanding. The substation supplies 15 MW of residential and commercial loads (Figure 16). The substation is supplied partly by a 125-kV line and partly by a privately owned and operated 31-MW thermal power plant that can also export excess power. Planned islanding capability is required to prevent service interruption when the 125-kV line is not available. In October 2005, islanding tests were performed and a 12-hour islanding about an 11-MW load was successfully achieved.

Microgrid related aspects of the Seneterre experiment are:

- ✔ control and mitigation of transients during switching to islanded operation, based on load and generation balancing prior to islanding
- ✔ stability based on a generator speed-droop governor control
- ✔ protection coordination for the island
- ✔ power quality provision for specific loads during autonomous operation.

Development of MV Test Line

This project aims to upgrade one of HQ's MV distribution lines for testing various concepts, methods, algorithms, and technologies related to DER integration, smart distribution system concepts, and microgrids. The test line, after upgrade, will provide an automated decentralized electricity network test site (AIDENTS) including industrial-scale DERs, controllable linear and nonlinear loads, and power quality measurement devices.

Conclusions

Microgrids are a future power system configuration providing clear economic and environmental benefits compared to expansion of our legacy modern power systems. It is clear that development of microgrid concepts and technologies requires considerable effort to resolve numerous economic, commercial, and technical challenges. Extensive RD&D efforts are therefore in progress, especially in Europe, the United States, Japan, and Canada, to provide efficient solutions and to demonstrate microgrid operating concepts in laboratories and in pilot installations. Close cooperation and exchange of information among these activities in the form of international symposiums has proven highly beneficial for the advancement of the relevant research. Coordinated, joint RD&D efforts are expected to provide further mutual benefits for the research parties involved.

The emergence of microgrids may ultimately radically change the way our ever expanding electricity demand is met, especially in places currently poorly served by the traditional power system.

Acknowledgments

The authors have drawn upon the assistance of many in the preparation of this article. Of particular assistance have been Sumit Bose (GE), Lisa Dignard-Bailey (NRCan), Toshihisa Funabashi (Meidensha), Susan Horgan (DUIT), Nicole Jenkins (U. of Manchester), Farid Katiraei (NRCan), Ben Kroposki (NREL), Jonathan Lynch (Northern), Satoshi Morozumi (NEDO), Carl Brothers (Frontier), Jaoa Peças Lopes (INESC Porto), Mark Rawson (SMUD), Manuel Sánchez Jiméz (E.C.), Goran Strbac (Imperial), and Bernard Treanton (CEC).

For Further Reading

European Commission (Apr. 2006), "European SmartGrids technology platform: Vision and strategy for Europe's electricity networks of the future" [online]. Available: http://ec.europa.eu/research/energy/pdf/smartgrids_en.pdf.

B. Buchholz, A. Engler, N. Hatziargyriou, J. Scholtes, U. Schluecking, and I. Furones Fartos, "Lessons learned: European pilot installations for distributed generation. An overview by the IRED cluster," *CIGRE 2006*, Paris, August 2006, paper C6-302.

R. Lasseter, A. Abbas, C. Marnay, J. Stevens, J. Dagle, R. Guttromson, A. Sakis Meliopoulos, R. Yinger, and J. Eto, "Integration of distributed energy resources: The CERTS microgrid concept," California Energy Commission, P500-03-089F, Oct. 2003.

Y. Fujioka, H. Maejima, S. Nakamura, Y. Kojima, M. Okudera, and S. Uesaka, "Regional power grid with renewable energy resources: A demonstrative project in Hachinohe," *CIGRE* 2006, Paris, August 2006.

K. Hirose, T. Takeda, and S. Muroyama, "Study on field demonstration of multiple power quality levels system in Sendai," in *Proc. INTELEC 2006*, pp. 1–6, Sept. 2006.

RETScreen International, "Wind energy project—Isolated island community" [online]. Available: http://www.retscreen.net/ang/t_case_studies.php.

R. Fulton and C. Abbey, "Planned islanding of 8.6 MVA IPP for BC Hydro system reliability," in *Proc. 1st Int. Conf. Integration of RE and DEF*, Brussels, Belgium, Dec. 2004.

Biographies

Nikos Hatziargyriou received a Diploma in Electrical and Mechanical Engineering from the National Technical University of Athens (NTUA) and the MSC and Ph.D. degrees from UMIST, Manchester, England. Since 1984 he has been with the Power Division of the School of Electrical and Computer Engineering of NTUA, where he has been a full professor since 1985. His research interests include distributed energy resources and dynamic security analysis. He is a senior member of IEEE, member of CIGRE SCC6, and member of the EU Technology Platform on Future Power Systems (SmartGrids). He is elected Vice-president of the Public Power Corporation (PPC) of Greece and a member of its Administrative Council.

Hiroshi Asano received the B.Eng., M.Eng., and D.Eng. degrees in electrical engineering from the University of Tokyo. He is currently a professor at the University of Tokyo and a senior research scientist with the Central Research Institute of Electric Power Industry in Tokyo, Japan. His research interests include modeling and control of distributed energy resources. He is a member of the IEEE and a senior member of the Institute of Electrical Engineers of Japan.

Reza Iravani received his B.Sc. degree in electrical engineering from Polytechnique University, Tehran, and worked as a consulting engineer from 1976 to 1979. Subsequently he received his Masters and Ph.D. degrees also in electrical engineering from the University of Manitoba, Canada. Currently, he is a professor at the University of Toronto and his research interests include modeling and control of power electronic converters, distributed resources, and power systems. He is an IEEE Fellow and a professional engineer in Ontario, Canada.

Chris Marnay has a Ph.D. in Energy and Resources from the University of California, Berkeley, and has worked at Berkeley Lab since 1984, where he is a member of the Consortium for Electrical Reliability Solutions (CERTS) team. His group has recently focused on developing methods for the economic evaluation of on-site power generation in buildings, especially where cooling is required. He has served in various consulting capacities and in 2006, he spent two months visiting the University of Kitakyushu as a Japan Society for the Promotion of Science Fellow.